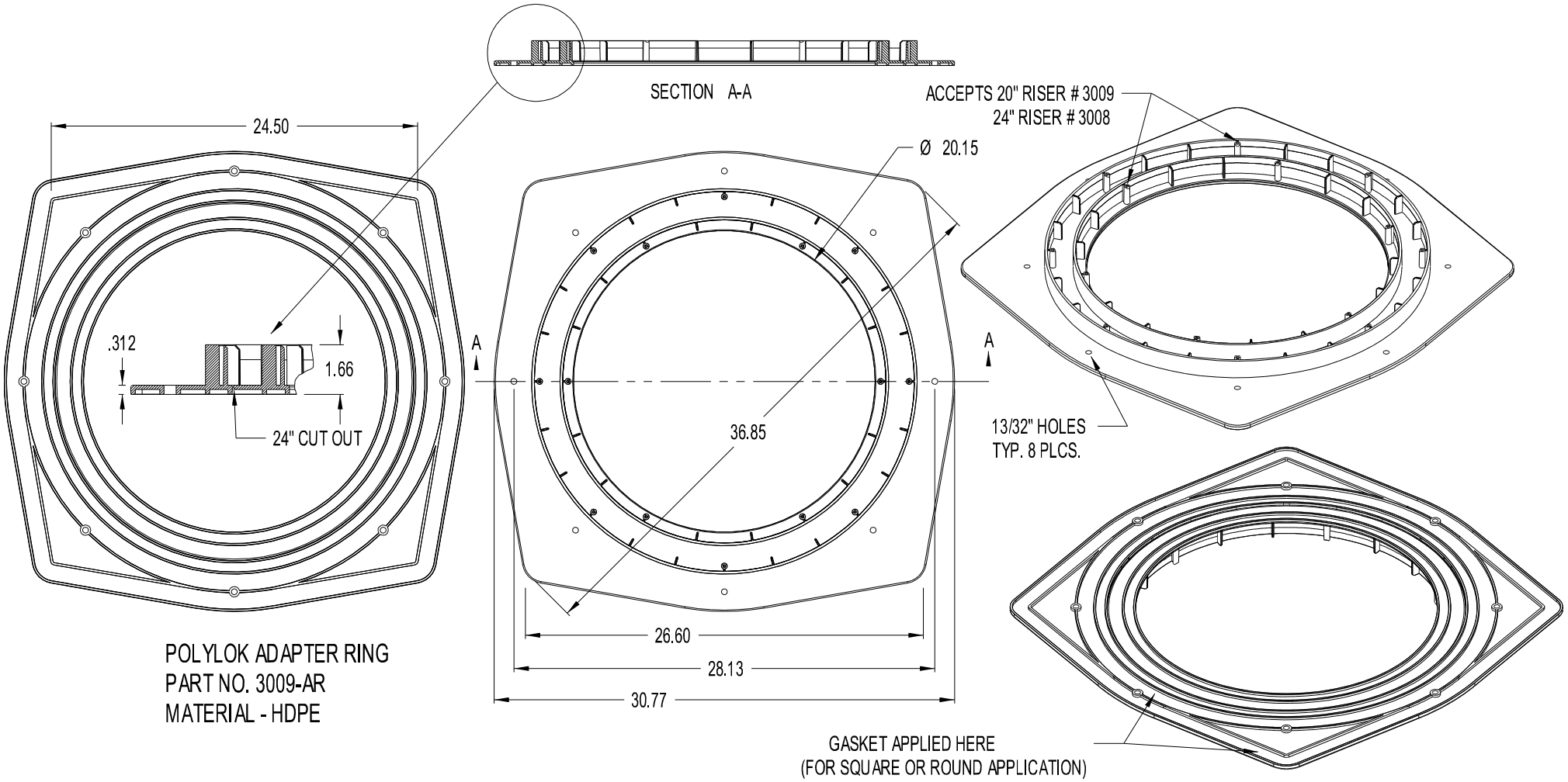

POLYLOK ADAPTER RING
PART NO. 3009-AR
MATERIAL - HDPE